STANDARD MATERIAL REQUIREMENTS:
METAL: NO BURRS PERMISSIBLE
NON METAL: F.M.V.S.S. 302

National Seating
100 MATHEWS DRIVE
VINDRE, TN. 37885

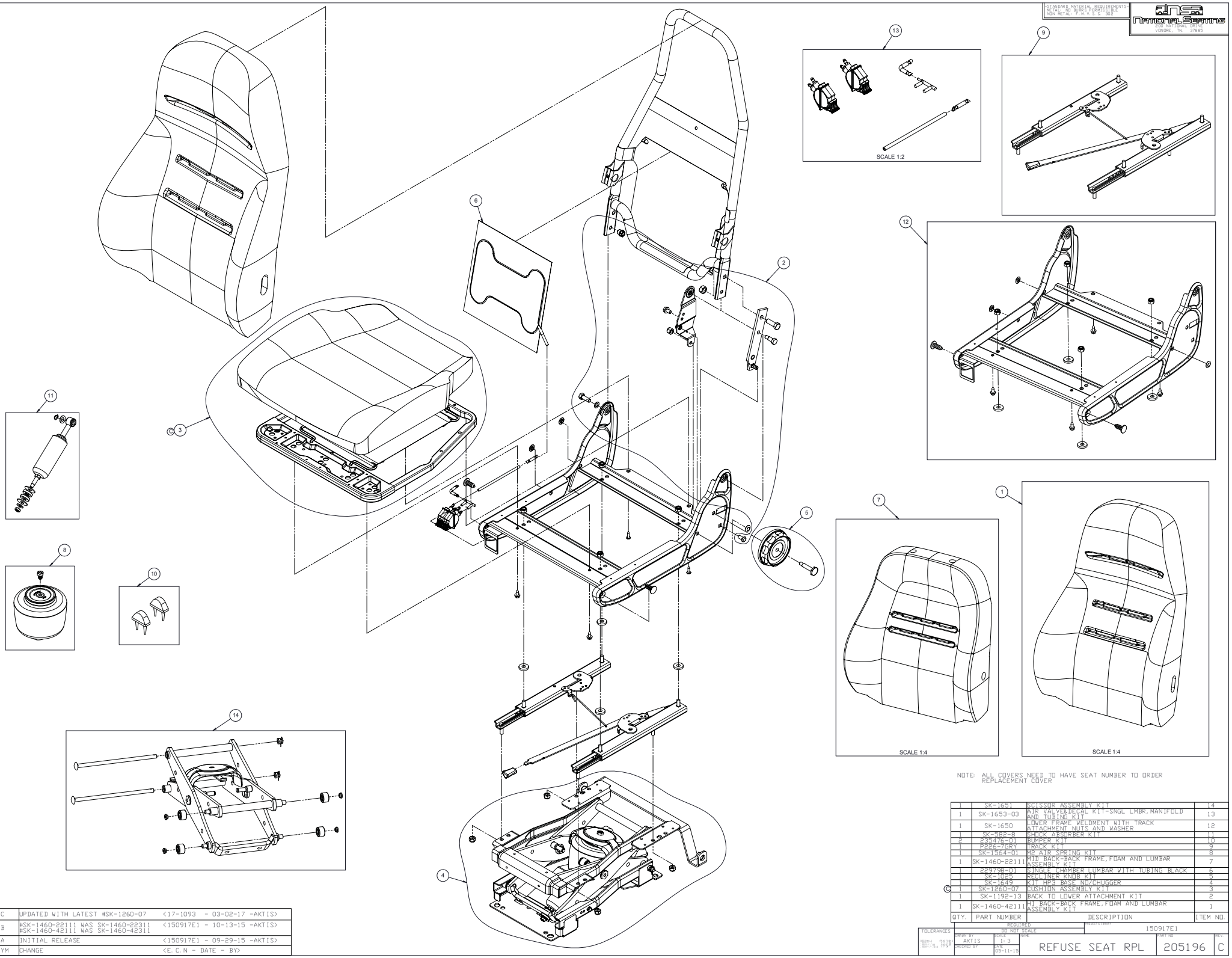

NOTE: ALL COVERS NEED TO HAVE SEAT NUMBER TO ORDER REPLACEMENT COVER

QTY.	PART NUMBER	DESCRIPTION	ITEM NO.
1	SK-1651	SCISSOR ASSEMBLY KIT	14
1	SK-1653-03	AIR VALVE&DEAL KIT-SNGL LMBR,MANIFOLD AND TUBING KIT	13
1	SK-1650	LOWER FRAME WELDMENT WITH TRACK ATTACHMENT NUTS AND WASHER	12
1	SK-582-8	SHOCK ABSORBER KIT	11
2	23547G-01	BUMPER KIT	10
1	P225-7GRY	TRACK KIT	9
1	SK-1564-01	M2 AIR SPRING KIT	8
1	SK-1460-22111	MID BACK-BACK FRAME,FOAM AND LUMBAR ASSEMBLY KIT	7
1	22979B-01	SINGLE CHAMBER LUMBAR WITH TUBING BLACK	6
1	SK-1025	RECLINER KNOB KIT	5
1	SK-1649	KIT HP3 BASE NO/CHUGGER	4
C 1	SK-1260-07	CUSHION ASSEMBLY KIT	3
1	SK-1192-13	BACK TO LOWER ATTACHMENT KIT	2
1	SK-1460-42111	HI BACK-BACK FRAME,FOAM AND LUMBAR ASSEMBLY KIT	1

SYM	CHANGE	<E.C.N - DATE - BY>
C	UPDATED WITH LATEST #SK-1260-07	<17-1093 - 03-02-17 -AKTIS>
B	#SK-1460-22111 WAS SK-1460-22311 #SK-1460-42111 WAS SK-1460-42311	<150917E1 - 10-13-15 -AKTIS>
A	INITIAL RELEASE	<150917E1 - 09-29-15 -AKTIS>

TOLERANCES: REQUIRED DO NOT SCALE

DRAWN BY: AKTIS	SCALE: 1:3	NAME: REFUSE SEAT RPL	PART NO: 205196
CHECKED BY:	DATE: 05-11-15		REV: C

PROJECT/ERAWI: 150917E1